Since 1959	Product Information Sheet H11 12V 55W SV	HIB H11 BRIGHTMAX 2020. 03. 12 NEW 2017. 08. 10 OLD

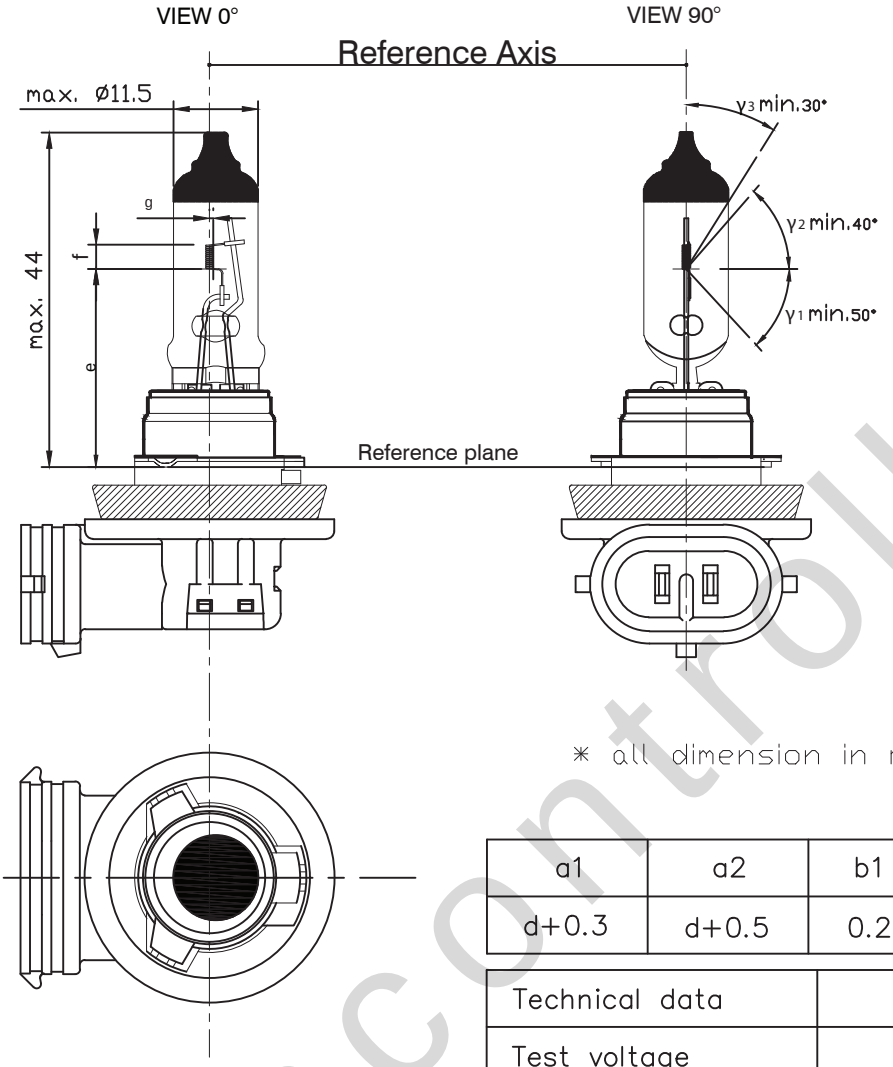

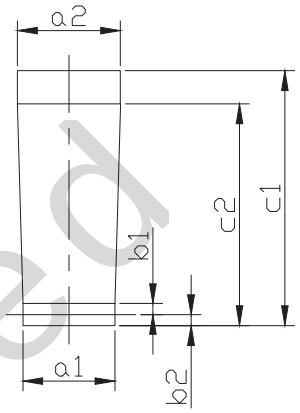

d	1.35 nom
e	25±0.2
f	4.5±0.3
h1(0°)	0±0.15
h1(90°)	0±0.15
h2(0°)	0±0.25
h2(90°)	0±0.25

* all dimension in mm

a1	a2	b1	b2	c1	c2
d+0.3	d+0.5	0.2	0.2	5.0	4.0

Technical data	R37	FMVSS108
Test voltage	13.2V	12.8V
Power	62W max.	59W max.
Luminous flux	1350lm ±10%	1250lm ±12%
Lumen maintenance after 200hr	85 % min	85 % min
Rated life:	4) 5) at 13.2V Tc: 600 hr B50: 550 hr B3: 300 hr	2) 3) at 14.0V B70: 270 hr B50: 240 hr B10: 160 hr
Maximum operating temperature:	1: bulb 800°C max 2: pinch 400°C max	
Vibration resistance acc. to IEC 60810 Annex B; table B.2	> 20h	

Halogen bulb

H11 SV 12V 55W

Cap: 1) PGJ19-2

Type: SV

ECE R37 (E1) 2RY

FMVSS108 DOT

Bulb: UV-cut Quartz glass

1) According to IEC 60061-1 sheet 7004-110-2
2) According to SAE J 1383 Annex 5.20
3) Switching cycle according to SAE J 1383 5.20.2
4) According to IEC 60810 Annex A
5) Switching cycle according to IEC 60810 Annex A;4.1.1
6) Switching cycle according to IEC 60810 Annex A;4.1.2
7) Switching cycle according to IEC 60810 Annex A;4.2

uncontrolled